PITCH : 4.25
WIDTH : 2.2
TIRNS : 1

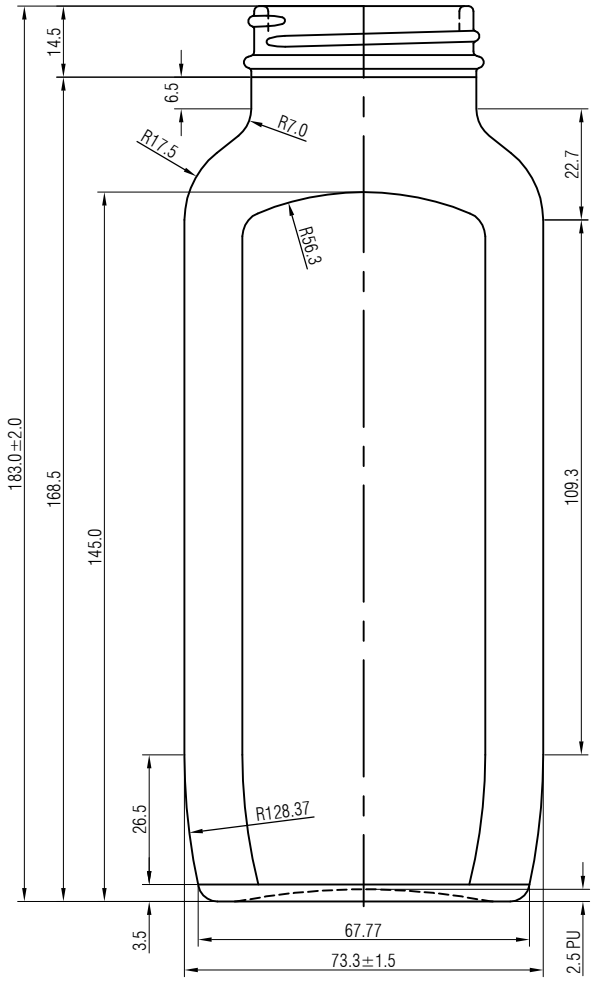

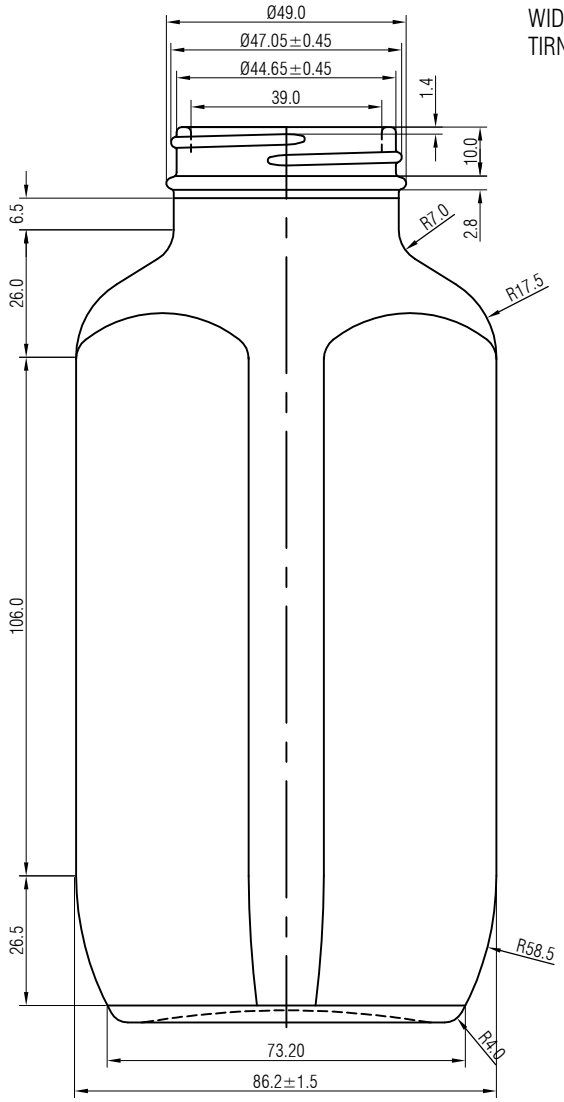

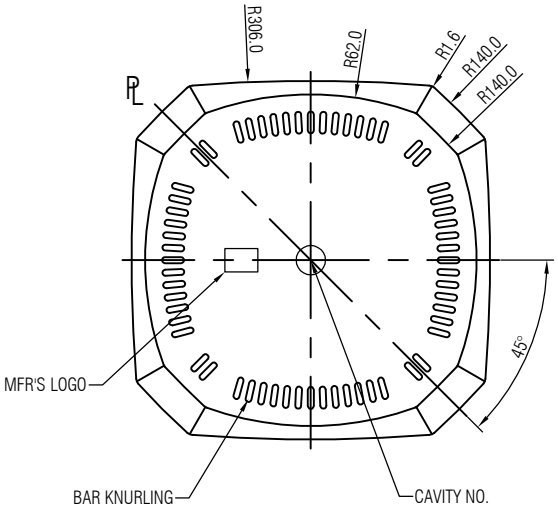

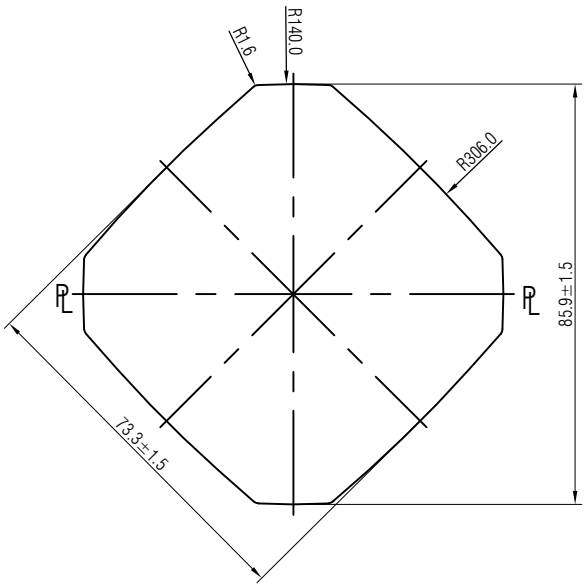

* ALL DIMENSIONS ARE IN M.M.

REVISIONS				
	TITLE : 600 ML. EXPORT			
	CLIENT			
	NECK FINISH	GPI-48-405	DATE	20/02/2026
	FILLING CAP.	---	DRN.BY	
	OVER FLOW CAPACITY	632±8.0 ML.	CHD.BY	EGE
	WEIGHT	370±20 GMS.	SCALE	1 : 1

EMTEL GLASS ENGINEERING

PLOT NO. 417, G.I.D.C., POR- RAMANGAMDI, DIST. VADODARA-391243, GUJARAT

DRG.NO :- EGE-062